DEAL TRAY NOTES:

1. 16 GA STAINLESS STEEL DEAL TRAY W/ #3 SATIN BRUSHED FINISH
2. COUNTER TOP (AS REQUIRED)
3. CUT OUT REQUIRED: 15" x 8 7/8"

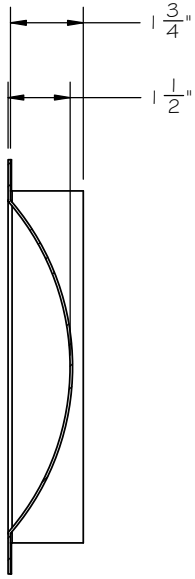

SECTION E-E

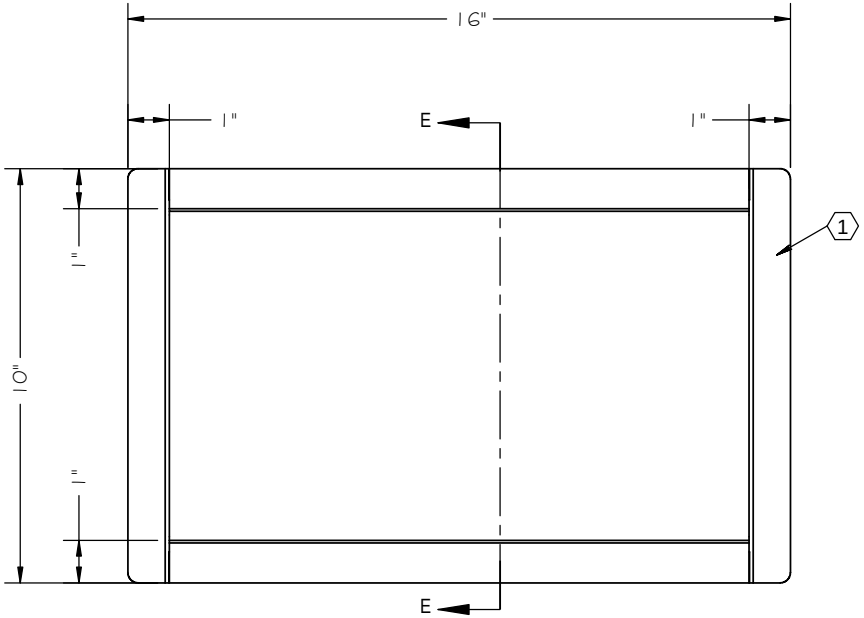

TOP VIEW
(1) REQUIRED

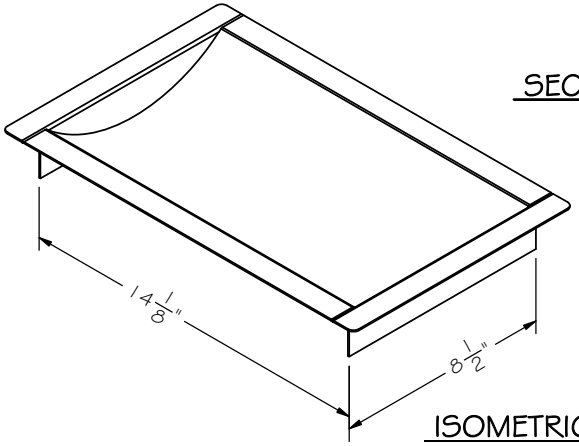

ISOMETRIC VIEW

☐ APPROVED AS DRAWN ☐ APPROVED AS NOTED ☐ REJECTED

X _____

SIGNATURE DATE

ARMORTEX®
BULLET • BLAST • FORCED ENTRY - PROTECTION PRODUCTS
5926 CORRIDOR PKWY SCHERTZ, TX 78154
TEL: 210-661-8306 800-880-8306 FAX: 210-661-8308
www.armortex.com

PROJECT NO:	TBD
CUSTOMER NAME:	TBD
PROJECT NAME:	TBD
DESCRIPTION:	RMDT 1016

	NAME	DATE
DRAWN	Z. GOODEN	6/10/2021
CHECKED		

SIZE B | DWG. NO. SUBMITAL PACKAGE - deal tray

SCALE: 1:3 | WEIGHT:TBD | SHEET 2 OF 35

UNLESS OTHERWISE SPECIFIED:
DIMENSIONS ARE IN INCHES
TOLERANCES:
FRACTIONAL ±1/16"
ANGULAR: ±1°
TWO PLACE DECIMAL ±.01
THREE PLACE DECIMAL ±.005
INTERPRET GEOMETRIC TOLERANCING PER: ASME Y14.5
MATERIAL 16 GA.
FINISH #3 BRUSHED
DO NOT SCALE DRAWING

REVISIONS

No.	DESCRIPTION	DATE

\\Armortex-DC2\Groups\CADHOLE\ARMORTEX MASTERS - 2007\TEMPLATES\SOLIDWORKS\SUBMITAL PACKAGE - deal tray